KALLI 060 BOX D

Mounting: Wire suspension with flex

Dimensions
w 70 · h 70
Weight
3.7kg/m

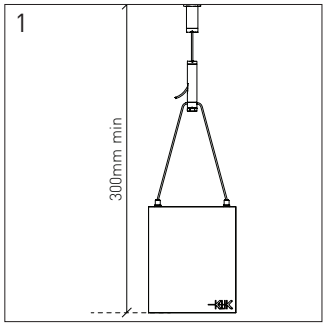

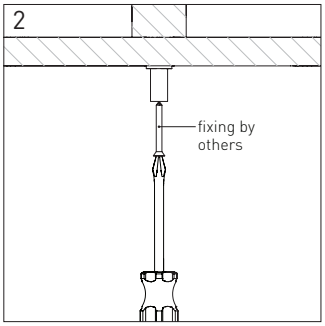

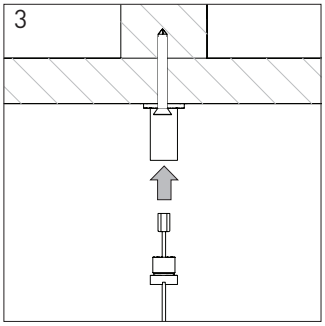

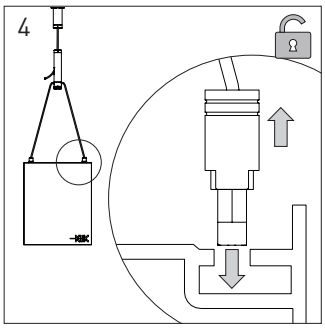

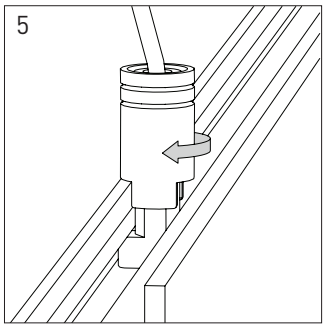

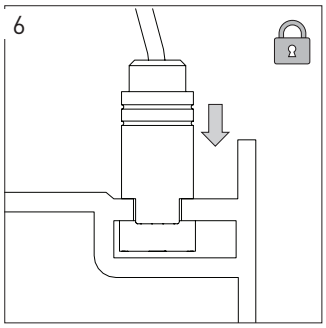

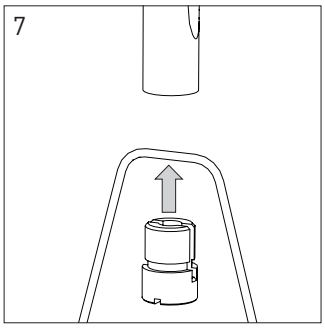

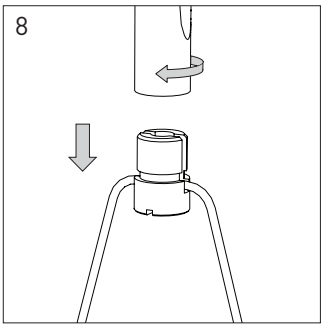

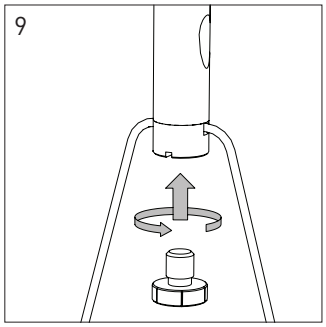

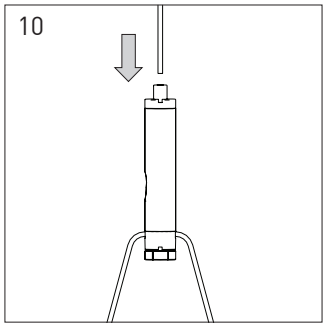

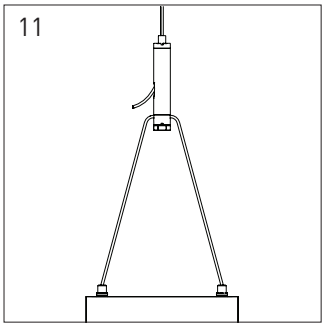

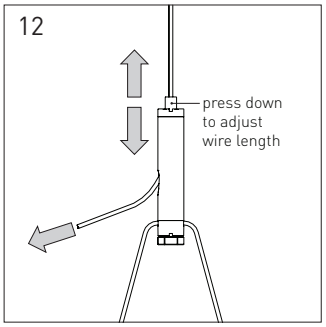

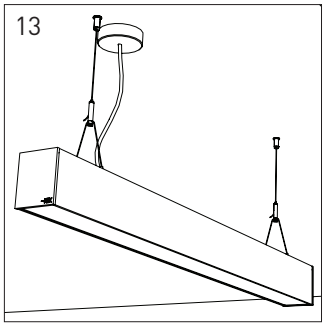

For commercial and industrial use only, the light source contained in this luminaire shall only be replaced by the manufacturer or the service agent or a similar qualified person.

KALLI 060 BOX D

Mounting: Wire suspension with flex by others

Dimensions
w 70 · h 70
Weight
3.7kg/m

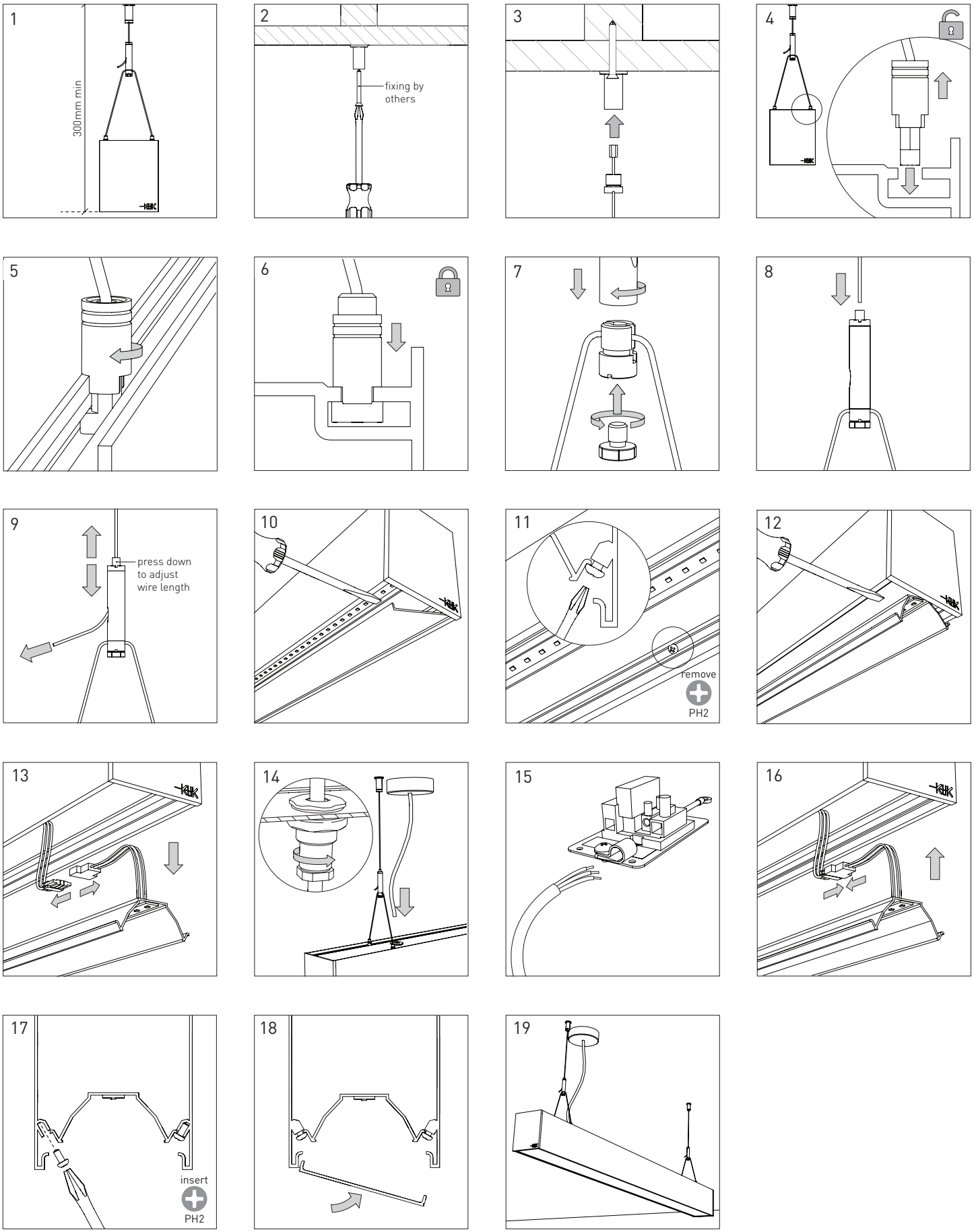

For commercial and industrial use only, the light source contained in this luminaire shall only be replaced by the manufacturer or the service agent or a similar qualified person.