KALLI 060 BEAM DR

Blind Coupling

Dimensions
w 90 · h 85
Weight
4.2 kg/m

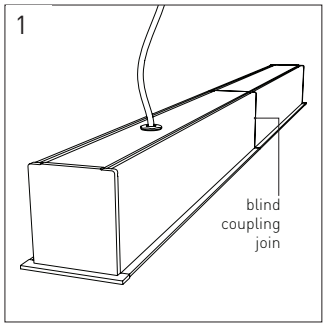

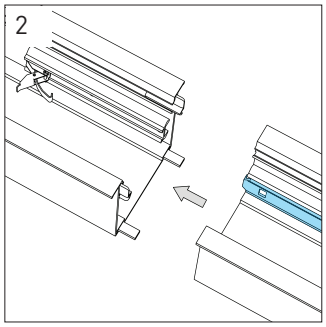

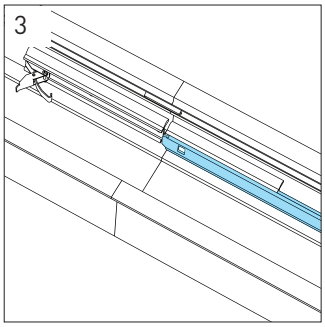

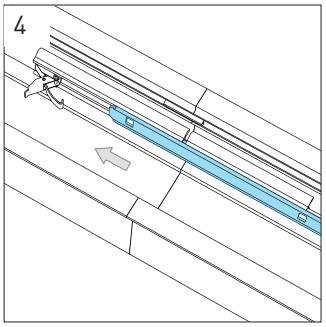

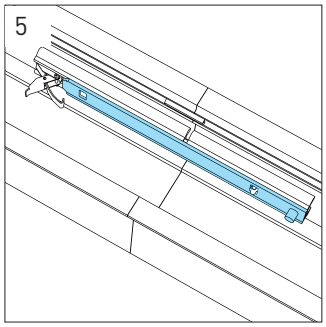

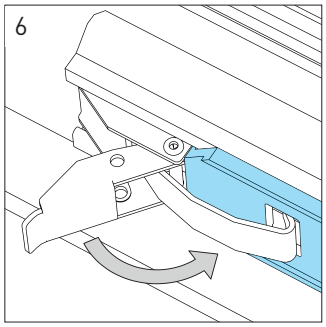

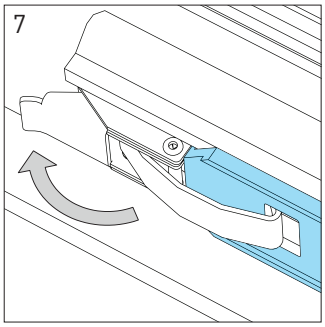

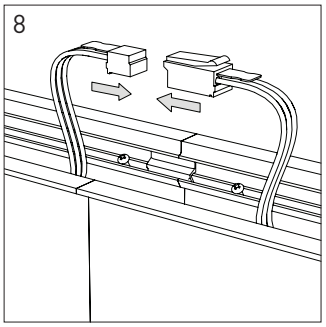

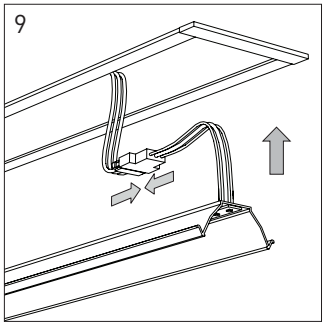

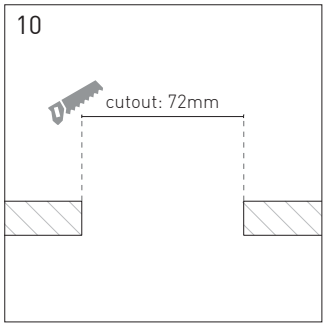

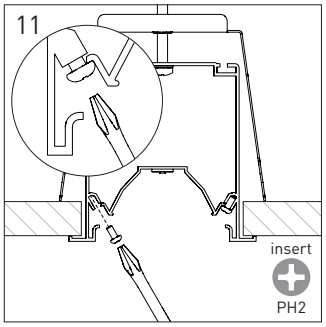

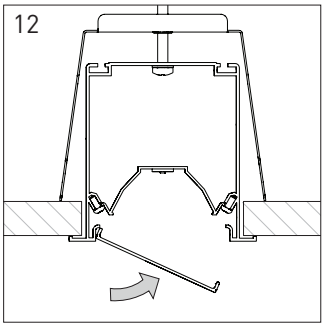

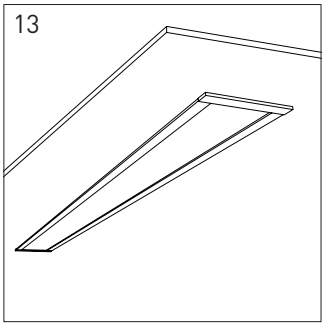

For commercial and industrial use only, the light source contained in this luminaire shall only be replaced by the manufacturer or the service agent or a similar qualified person.