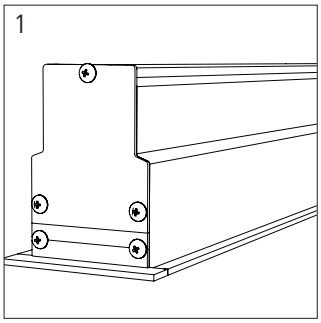

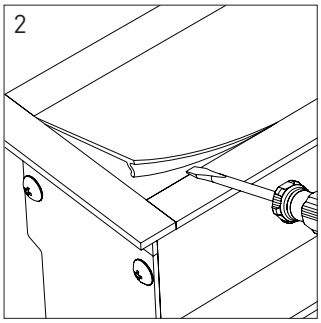

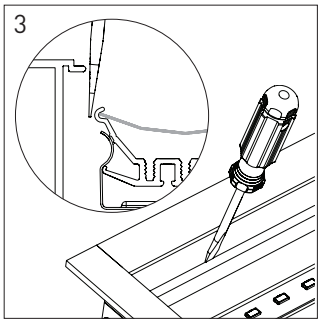

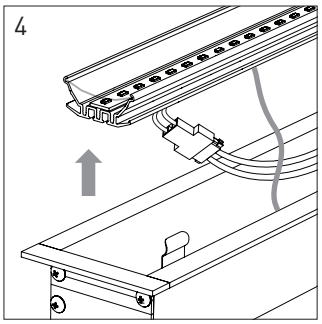

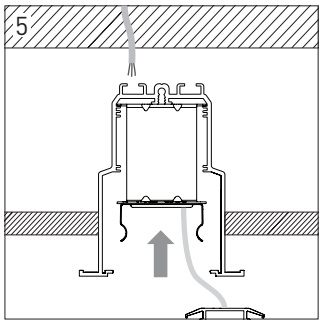

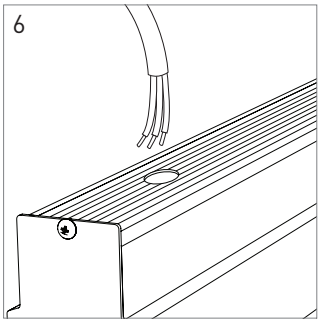

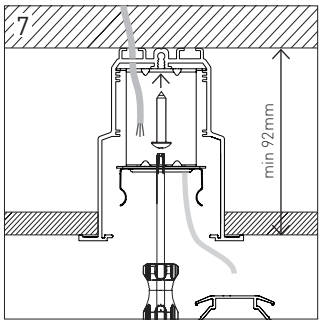

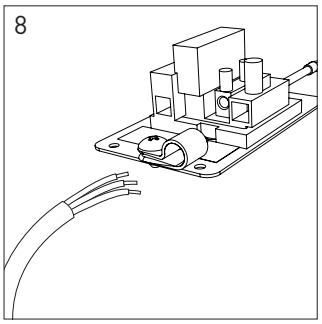

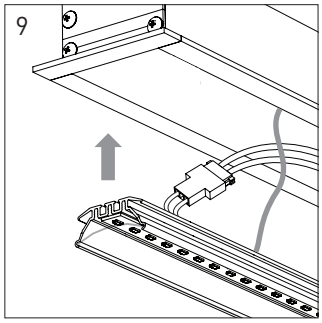

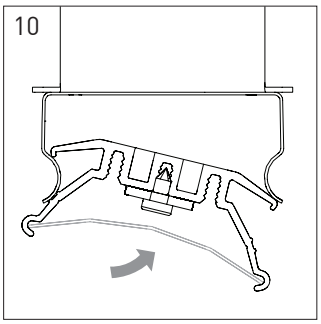

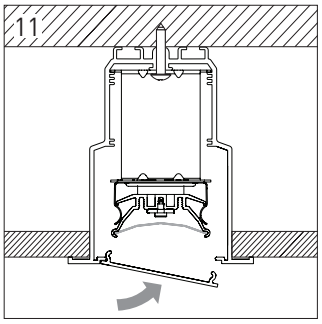

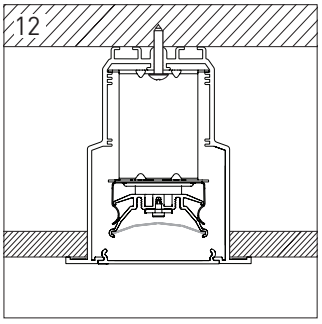

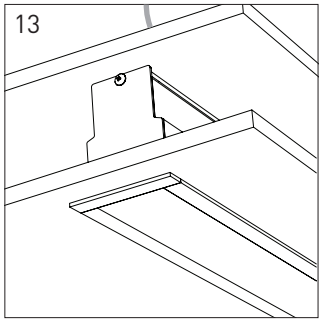

The light source contained in this luminaire shall only be replaced by the manufacturer or the service agent or a similar qualified person.